QTY.	PART NUMBER
1	09D-16-00-1-01-BASE PLATE
1	09D-16-00-1-02-CYLINDER
1	09D-16-00-1-03-PORT BLOCK
1	09D-16-00-1-04-VALVE GLAND
1	09D-16-00-1-05-VALVE SPINDLE GUIDE
2	09D-16-00-1-06-IN-OUTLET PIPE
2	09D-16-00-1-07-M10 STOP SCREW
1	09D-16-00-1-08-CYLINDER TOP COVER
1	09D-16-00-1-09-PISTON GLAND
1	09D-16-00-1-10-A-FRAME+FLYWHEEL BEARING
1	09D-16-00-1-10-A-FRAME+FLYWHEEL BEARING
1	09D-16-00-1-12-A-FRAME TOP CROSS BAR
1	09D-16-00-1-13-DISC AXLE
1	09D-16-00-2-01-FLYWHEEL SHAFT
1	09D-16-00-2-02-FLYWHEEL
1	09D-16-00-2-03-DRIVE PULLEY
1	09D-16-00-2-04-CLUTCH GEARWHEEL
2	09D-16-00-2-05-CLUTCH GEARWHEEL COVER
1	09D-16-00-2-06-PISTON+ROD
1	09D-16-00-2-07-RACK
1	09D-16-00-2-09-SLIDE VALVE+SPINDLE
1	09D-16-00-2-10-SLIDE VALVE SPINDLE END YOKE
1	09D-16-00-2-13-ECCENTRIC STRAP
1	09D-16-00-2-14-ECCENTRIC SHEAVE MOUNTING DISC
24	09D-16-00-M3x6 A-K C-SINK SCREW
10	09D-16-00-M3x6 A-K CYL HEAD SCREW
9	09D-16-00-M4 DOME NUT
1	09D-16-00-M4 WASHER-BRASS
4	09D-16-00-M4x8 GRUB SREW
9	09D-16-00-M4x10 A-K CYL HEAD SCREW
2	09D-16-00-M4x14 A-K C-SINK SCREW
8	09D-16-00-M4x42 STUD
4	09D-16-00-M5 NUT
4	09D-16-00-M5x12 A-K CYL HEAD SCREW
6	09D-16-00-M5x16 A-K CYL HEAD SCREW
3	09D-16-00-M5x22 A-K CYL HEAD SCREW
2	09D-16-00-M5x26 A-K CYL HEAD SCREW
1	09D-16-00-M6 NUT
8	09D-16-00-M6x14 A-K CYL HEAD SCREW
4	09D-16-00-M6x30 A-K CYL HEAD SCREW

NOTES:
0. ALL DRAWINGS ARE IN METRIC MEASUREMENTS
1. ALL ENGINEERING PRACTICES SHALL BE APPLIED WITH REGARDS TO HOLE AND SHAFT TOLERANCES.
2. WHERE SCREWS OR BOLTS ARE USED THE CLEARANCE HOLES SHALL BE APPROXIMATELY 5% TO 8% LARGER THAN THE MATCHING TAPPED HOLE.
3. PREFERABLY ALL TAPPED HOLES AND MATCHING SCREWS AND/OR BOLTS TO BE METRIC FINE (MF)
4. MATERIALS SPECIFIED ON THE DRAWINGS ARE INDICATIVE ONLY. THE BUILDER CAN MAKE HIS/HER OWN MATERIAL CHOICE.
5. ALL CONNECTIONS/JOINTS WHICH HAVE STEAM PRESSURE APPLIED TO IT SHALL BE SILVER/HARD SOLDERED.
6. COMPRESSION SPRINGS ARE DRAWN IN COMPRESSED STATE (CP), UNCOMPRESSED STATE IS APPROX 40% TO 60% LONGER THEN COMPRESSED STATE.
7. WHERE PREFERRED SCREW OR RIVETED CONNECTIONS CAN BE OMITTED AND PARTS CAN BE BONDED TOGETHER BY USING EITHER HIGH STRENGTH GLUE, EPOXY RESIN, OR SOLDER.
8. PARTS WHICH ARE DIRECTLY EXPOSED TO STEAM AND/OR WATER SHOULD BE CONSTRUCTED USING NON-FERROUS OR NON CORROSIVE MATERIAL SUCH AS BRASS, BRONZE, GUNMETAL, STAINLESS STEEL, COPPER OR MONEL.
9. THE ORDER IN WHICH THE PARTS/COMPONENTS ARE MANUFACTURED AND THE MODEL IS ASSEMBLED IS ENTIRELY LEFT TO THE BUILDER/MODEL MAKER.
10. A COLOUR SCHEME FOR THIS PROJECT IS ENTIRELY LEFT UP TO THE MODEL MAKER.
11. THE MANNER IN WHICH THE PARTS/COMPONENTS ARE MANUFACTURED IS ENTIRELY LEFT UP TO THE BUILDER.
12. USE LOCTITE, ON SCREW OR PRESS FIT CONNECTIONS OR SURFACES, WERE DEEMED NECESSARY TO PREVENT PARTS FROM LOOSENING.
13. WASHERS AND/OR SPRINGWASHERS SHALL BE USED WHERE DEEMED NECESSARY.
XX. ERRORS AND/OR OMISSIONS MAY OCCUR IN THE DRAWINGS, DO NOT HESITATE TO CONTACT ME SO THAT THE ERRORS/OMISSIONS CAN BE RECTIFIED.

THE OFF SET ANGLE OF THE ECCENTRIC IN RELATION TO THE CRANK AXIS TO BE EXPERIMENTALLY DETERMINED FOR THE SMOOTH RUNNING OF THE ENGINE AND SATISFACTION OF THE BUILDER

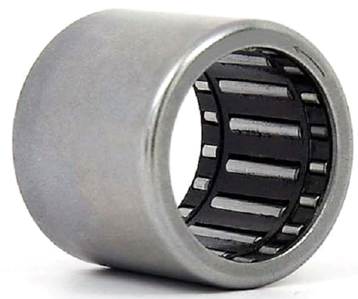

FC18 ID. 18 MM - 0.7086 OD. 24 MM - 0.944 W 16 MM - 0.629

Model: **FC18**

ID. 18 MM - 0.7086 OD. 24 MM - 0.944 W 16 MM - 0.629

Product Details

ID MM	18
ID Decimal	0.7086
OD MM	24
OD Decimal	0.9440
W MM	16
W Decimal	0.6290
Type	Metric
Weight	0.04
Interchange	INA HF-1816, Torrington FC-18, Consolidated FC-18

The mounted clutch engages when the housing is rotated relative to the shaft in the direction of the arrow marking stamped on the clutch. When manufactured the outer cup of the clutch is accurately drawn from strip steel, it can go slightly out of round durring heat treatment. When the assembly is pressed into a ring gauge or properly prepared houding of the correct size and wall thickness, it becomes round and is properly sized. The proper inspection procedure is as follows:

1. Press the assembly into a ring gauge of the proper size as given in the tabular data
2. Gauge the bore with the specified plug gauges of the proper size, as given in the tables of diamensions.

- a. The locking plug is rotated to insure lockup when the clutch is operated on low limit shaft and ids mounted in high limit housing strong enough to properly size the clutch.
- b. The overrun plug is rotated to insure free overruning when the clutch is operated on high limit shaft and is mounted in a low limit housing.
- c. The go plug and no go plug insure proper size of the bearings in the clutch and bearing assemblies.

CLUTCH BEARING INFORMATION

OTHER ABBREVIATIONS
DP = DEEP
DAA= DRILL AFTER ASSEMBLY
D&TAA= DRILL AND TAP AFTER ASSEMBLY
CF = CLOSE FIT (SIZE FOR SIZE)
PF = PRESS FIT
PFAA= PRESS FIT AFTER ASSEMBLY
PCD = PITCH CIRCLE DIAMETER
RM = REAM
HEX = HEXACON, 6SIDED
CP = COMPRESSED
KNL = KNURLED
CSK = COUNTERSINK
PL = PLACES
DWL= DOWEL
SPF= SPOTFACE
(T)HESOP=(TAPPED)HOLES EQUALLY SPACED ON PCD
(T)HESOC=(TAPPED)HOLES EQUALLY SPACED ON CIRCUMFERENCE
SA-xxx = SUB ASSEMBLY-xxx

MATERIAL ABBREVIATIONS:
ALU = ALUMINIUM
HALU= HARD ALUMINIUM
BRS = BRASS
BRZ = BRONZE OR GUNMETAL (BRZ/GM)
CI = CAST IRON
CU = COPPER
GRA = GRAPHITE
MS = MILD STEEL/BRIGHT MILD STEEL
SS = SILVER STEEL OR STAINLESS STEEL
SPS = SPRING STEEL
PEEK= POLYETHER ETHER KETONE
SYN = SYNTHETIC MATERIAL SUCH AS VETON, NYLON, TEFLON OR RUBBER
IN GENERAL SYNTHETIC MATERIALS SOULD BE ABLE TO WITHSTAND THE HEAT AND PRESSURE(S) APPLIED TO THEM.
nnn/nnn MEANS THAT EITHER MATERIAL CAN BE USED

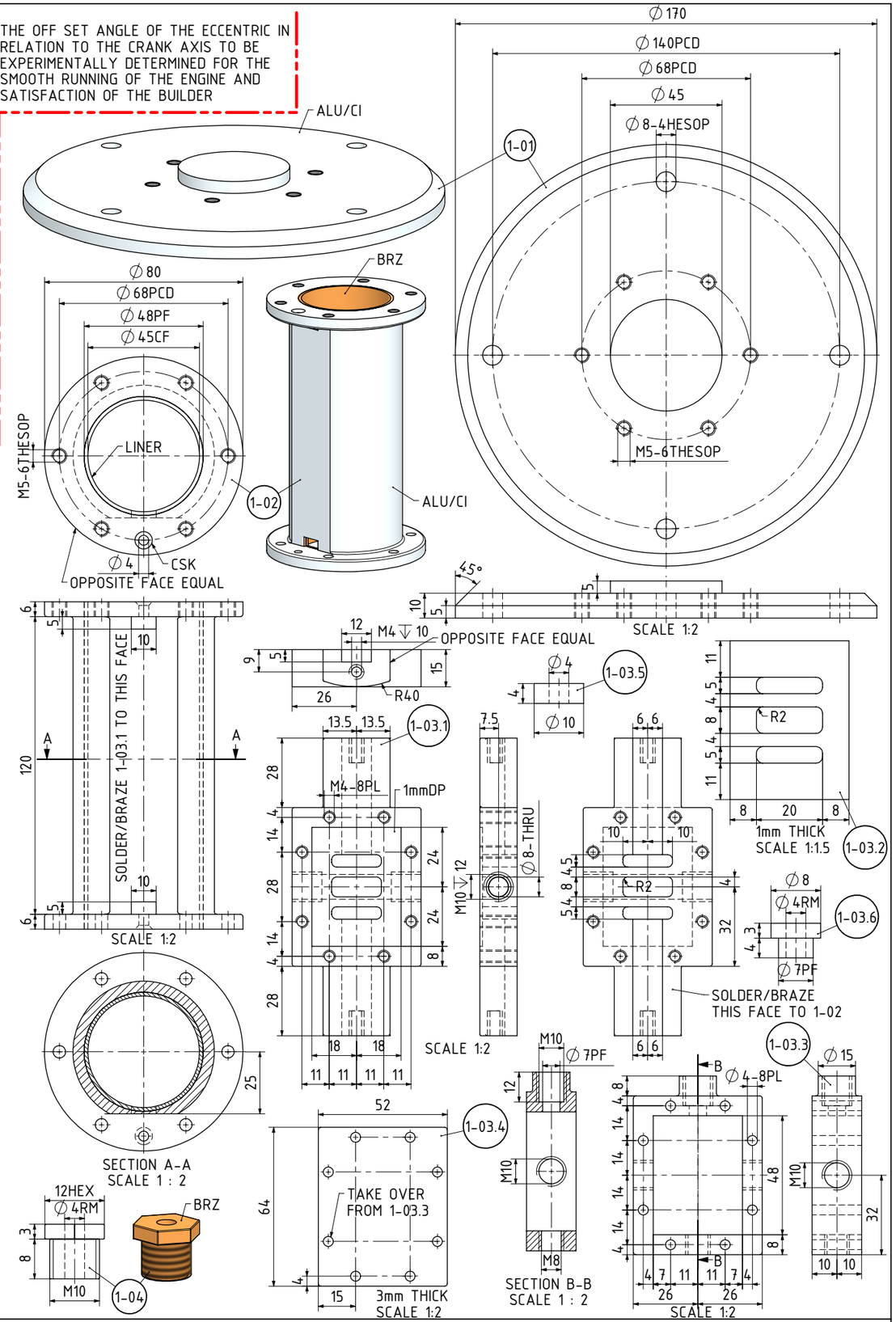

NOTES: DESIGNED AND DRAWN BY J.A.M.DE WAAL

TITLE	DRAWING CONTENTS		
EXPERIMENTAL 1 CYL. CRANKSHAFT-LESS STEAM ENGINE (OTTO LANGEN PRINCIPLE)	BILL OF MATERIALS, NOTES PARTS AND ASSEMBLIES	PROJECT No 09D-16-00	MODEL SCALE: 1:1
		JDW DRAUGHTING SERVICES	DWG SCALE: 1:1 @A3 OR AS SHOWN
		JDWDS — JULY 2018	Copyright © J.A.M. DE WAAL PAPAKURA NZ
		SHEET: 02 OF 04	A3 No: 09D-16-00-SHT02

J.A.M. DE WAAL. 12 BRIGHTWELL STREET PAPAKURA 2110. NEW ZEALAND. PHONE: 0064 09 2988815. MOB: 0211791000 E-MAIL: dewaal@xtra.co.nz.