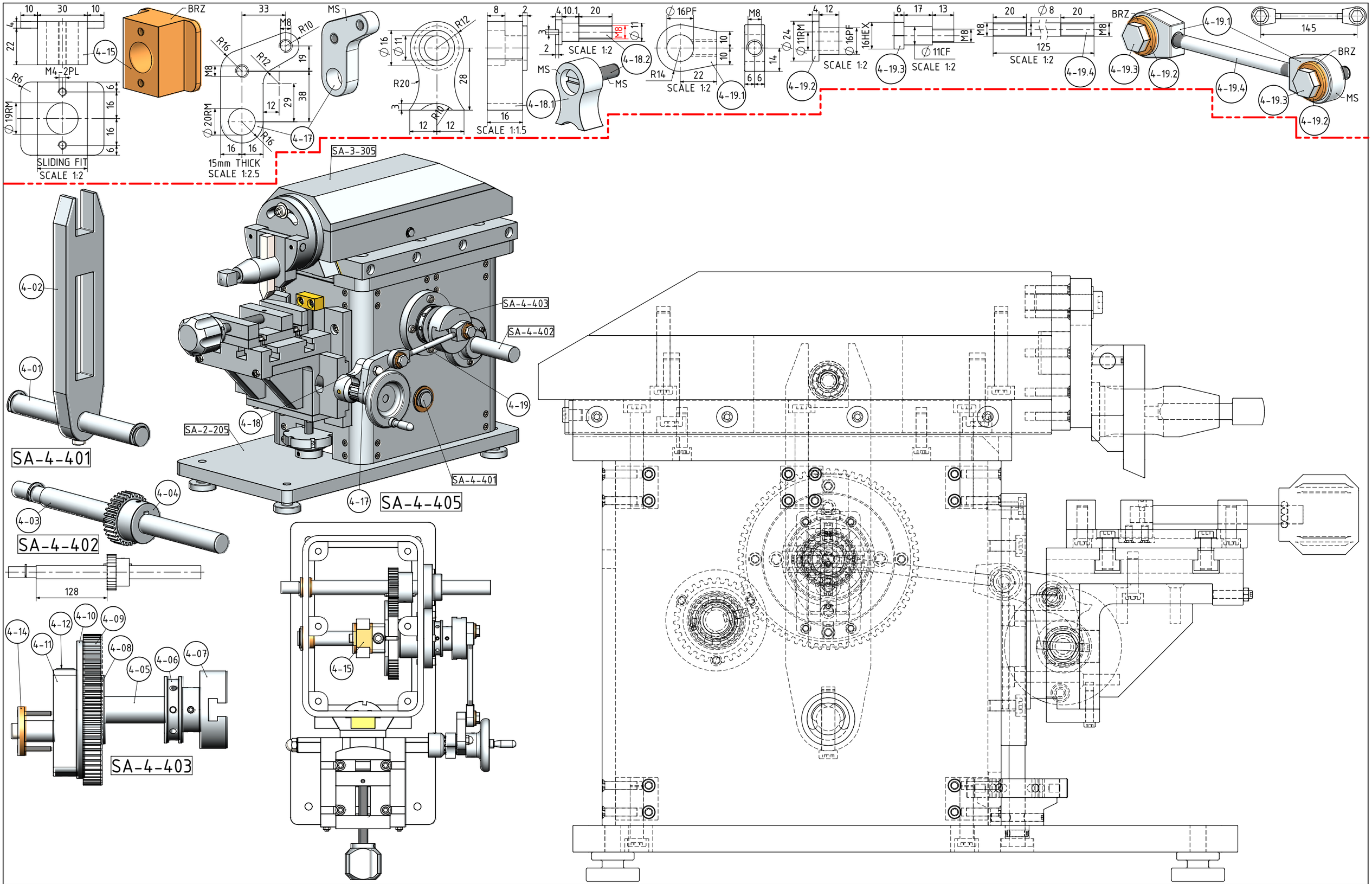

NOTES: FOUND THE ORIGINAL DRAWINGS ON THE INTERNET. THE ORIGINAL DESIGN IS BY BARRY MIDGRLEY OF AUSTRALIA AND DRAFTING WORK BY BRIAN RUPNO OF CANADA. MY DESIGN IS TWICE THE SIZE THAN THE ORIGINAL.

TITLE A SIMPLE SMALL METALWORKING SHAPER	DRAWING CONTENTS PARTS AND ASSEMBLIES	PROJECT No 01-29-00 JDW DRAUGHTING SERVICES J.A.M. DE WAAL. 12 BRIGHTWELL STREET PAPAKURA 2110. NEW ZEALAND. PHONE: 0064 09 2988815. MOB: 0211791000 E-MAIL: dewaal@xtra.co.nz.	PROJECTION JDWDS DATE MAY 2018 SHEET: 06 OF 07	MODEL SCALE: 1:1 DWG SCALE: 1:1 @A3 OR AS SHOWN Copyright © J.A.M. DE WAAL PAPAKURA NZ A3 No: 01-29-00-SHT06