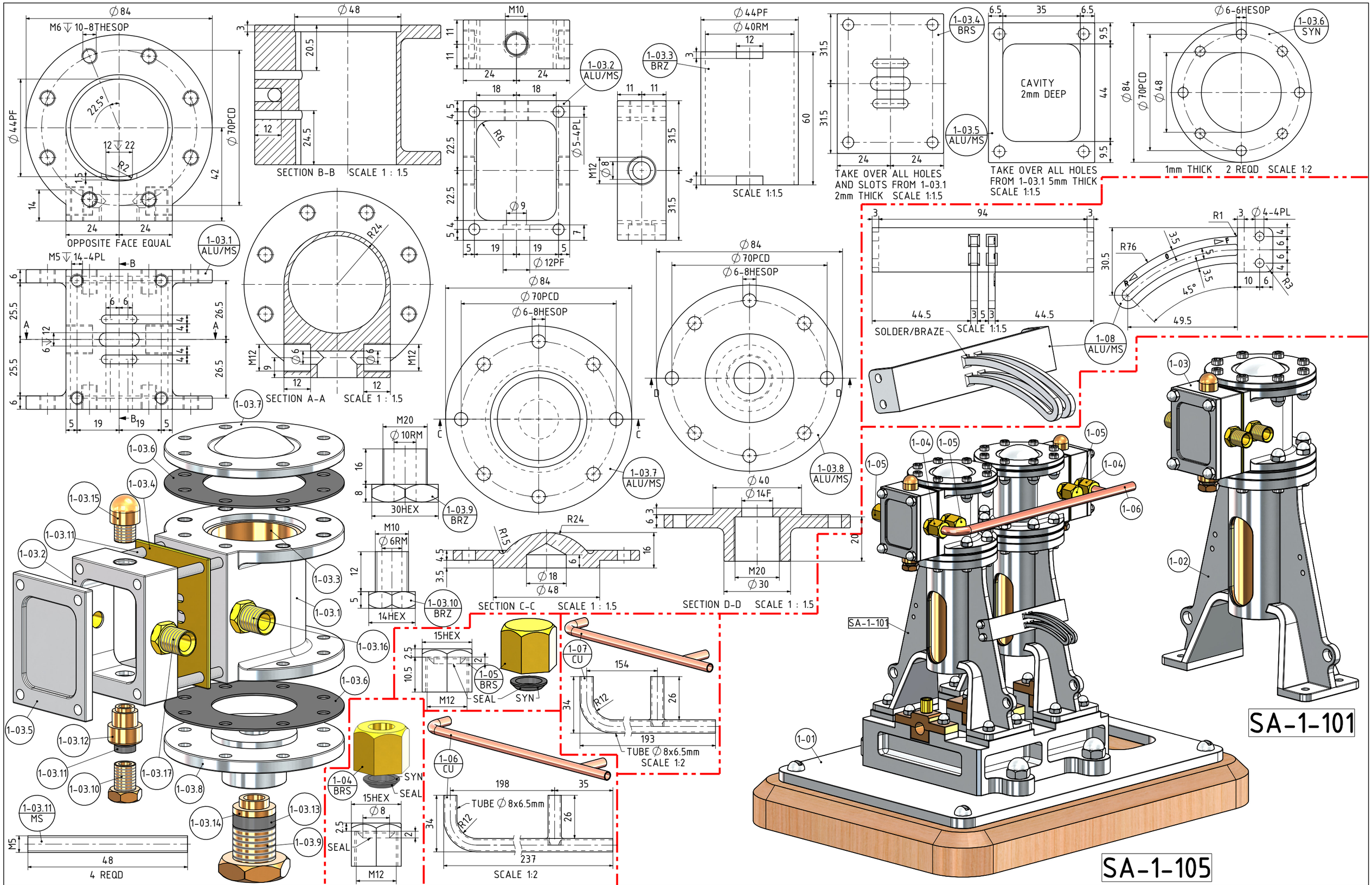

NOTES: THE ENGINE SHOWN ON THESE DRAWINGS IS LOOSLY BASED ON SOME DRAWINGS WHICH I FOUND ON THE INTERNET. THE DRAWINGS WERE BY J.GALBA, DATED 13-02-2010. I HAVE DRAWN A SIMULAR ENGINE UNDER PROJECT NUMBER 09C-45-00 DATED MAY 2020

TITLE 2 CYLINDER VERTICAL STEAM ENGINE WITH REVERSER (BORE=40mm STROKE=40mm)	DRAWING CONTENTS PARTS AND ASSEMBLIES	PROJECT No 09C-75-00 JDW DRAUGHTING SERVICES J.A.M. DE WAAL. 12 BRIGHTWELL STREET PAPAKURA 2110. NEW ZEALAND. PHONE: 0064 09 2988815. MOB: 0211791000 E-MAIL: dewaal@xtra.co.nz.	PROJECTION JDWDS MODEL SCALE: 1:1 DWG SCALE: 1:1 @A3 OR AS SHOWN DATE SEPTEMBER 2025 Copyright © J.A.M. DE WAAL PAPAKURA NZ SHEET: 03 OF 05 A3 No:09C-75-00-SHT-03

DRAWINGS ARE FOR PERSONAL USE ONLY NOT FOR COMMERCIAL PURPOSES