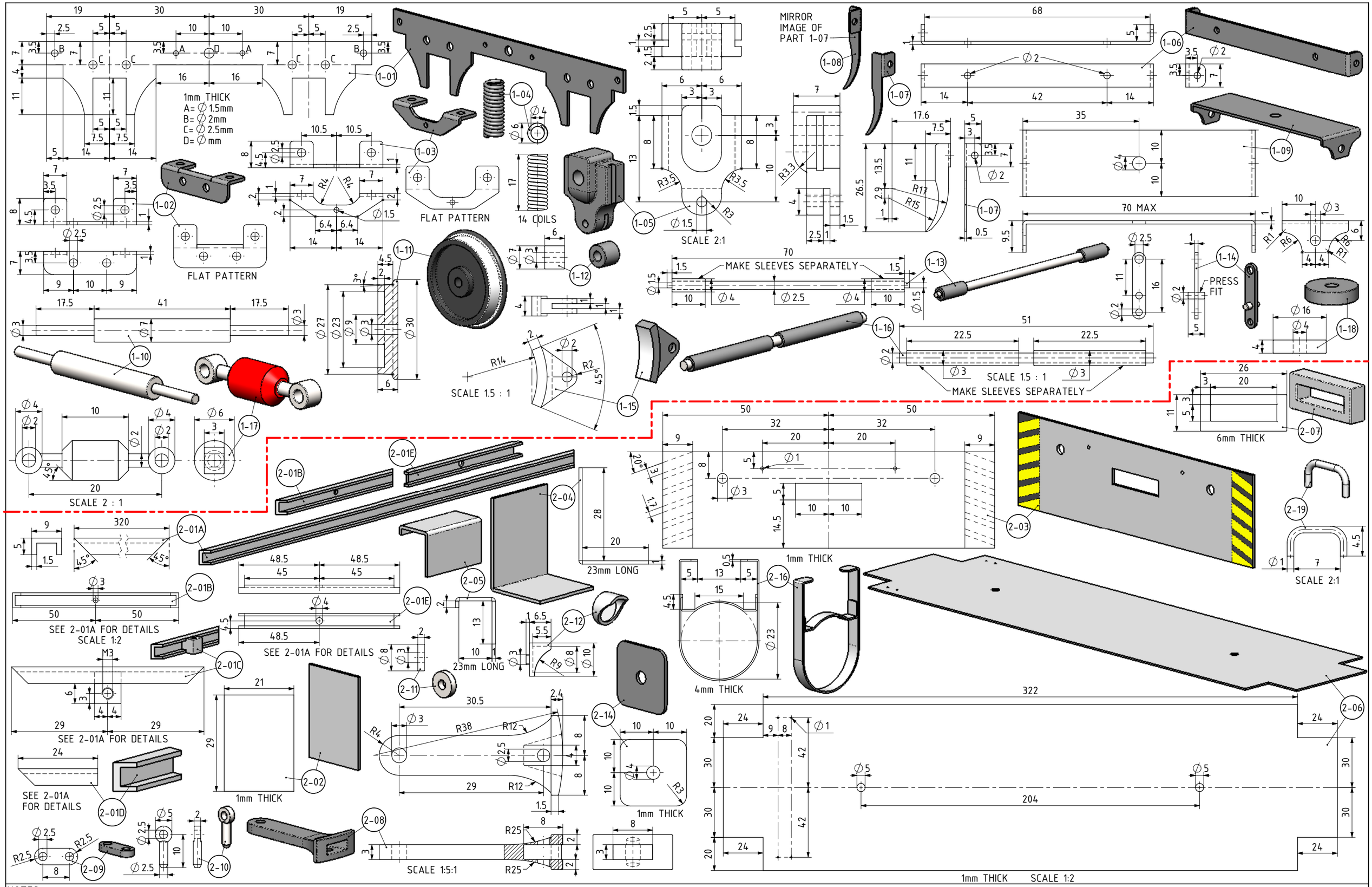

NOTES:

TITLE	DRAWING CONTENTS	PROJECT No		
MODEL OF DIESEL HYDRAULIC SHUNTER OF THE BULGARIAN NARROW GAUGE RAILWAYS (BDZ)	GENERAL ARRANGEMENT	JDW DRAUGHTING SERVICES J.A.M. DE WAAL. 12 BRIGHTWELL STREET PAPAKURA 2110. NEW ZEALAND. PHONE: 0064 09 2988815. MOB: 0211791000 E-MAIL: dewaal@xtra.co.nz.	PROJECTION JDWDS DATE JUNE 2014 SHEET:03 OF 06	MODEL SCALE: 1:17 (45mm GAUGE) DWG SCALE: 1:1 @A3 OR AS SHOWN Copyright © J.A.M. DE WAAL PAPAKURA NZ A3 No: BDHNGS-03