QTY.	PART NUMBER
1	STENPC-01-DISPLACER CYLINDER BOTTOM PLATE
1	STENPC-02-DISPLACER CYLINDER TOP PLATE
1	STENPC-03-DISPLACER CYLINDER
1	STENPC-04-DISPLACER CYLINDER GLAND
1	STENPC-05-POWER CYLINDER
1	STENPC-06-BEARING STAND
1	STENPC-07-BEARING HOUSING
2	STENPC-08-ROLLER BEARING
1	STENPC-09-CRANK SHAFT
1	STENPC-10-DISPLACER CRANK DISC
1	STENPC-11-POWER CRANK DISC
1	STENPC-12-FLYWHEEL
1	STENPC-13-POWER PISTON
1	STENPC-14-POWER PISTON CROSSHEAD
2	STENPC-15-POWER AND DISPLACER PISTON CON ROD
1	STENPC-16-DISPLACER PISTON CROSSHEAD
1	STENPC-17-DISPLACER
2	STENPC-M3x10 GRUB SREW
22	STENPC-M3x10 ROUND HEAD SCREW
2	STENPC-M3x15 C-SINK SCREW
7	STENPC-M3x15 ROUND HEAD SCREW

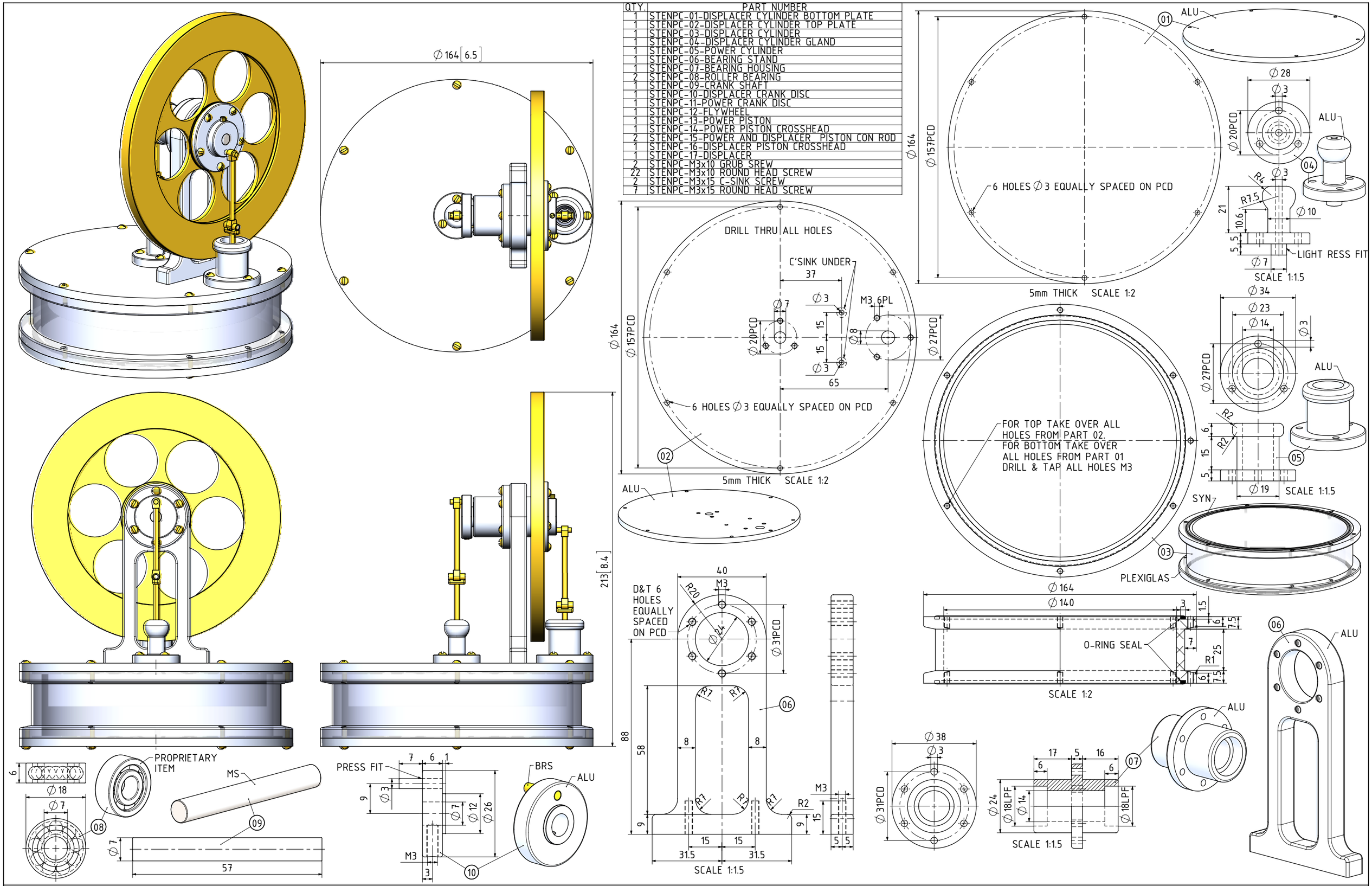

NOTES: FOR MORE INFORMATION GO TO: http://www.steamengine.com.au/index.php/stirling/models/91-a-low-temperature-stirling-engine-by-penn-clower.

TITLE	DRAWING CONTENTS			
STIRLING ENGINE BY PENN CLOWER	GA, ISOMETRIC VIEW, BOM, PARTS & ASSEMBLIES	PROJECT No 05A-09-00	PROJECTION JDWDS	MODEL SCALE: 1:1
		JDW DRAUGHTING SERVICES		DWG SCALE: 1:1 @A3 OR AS SHOWN
		J.A.M. DE WAAL. 12 BRIGHTWELL STREET PAPAKURA 2110. NEW ZEALAND. PHONE: 0064 09 2988815. MOB: 0211791000 E-MAIL: dewaal@xtra.co.nz.	DATE MAY-2015	Copyright © J.A.M. DE WAAL PAPAKURA NZ
			SHEET: 01 OF 02	A3 No: STENPC-01