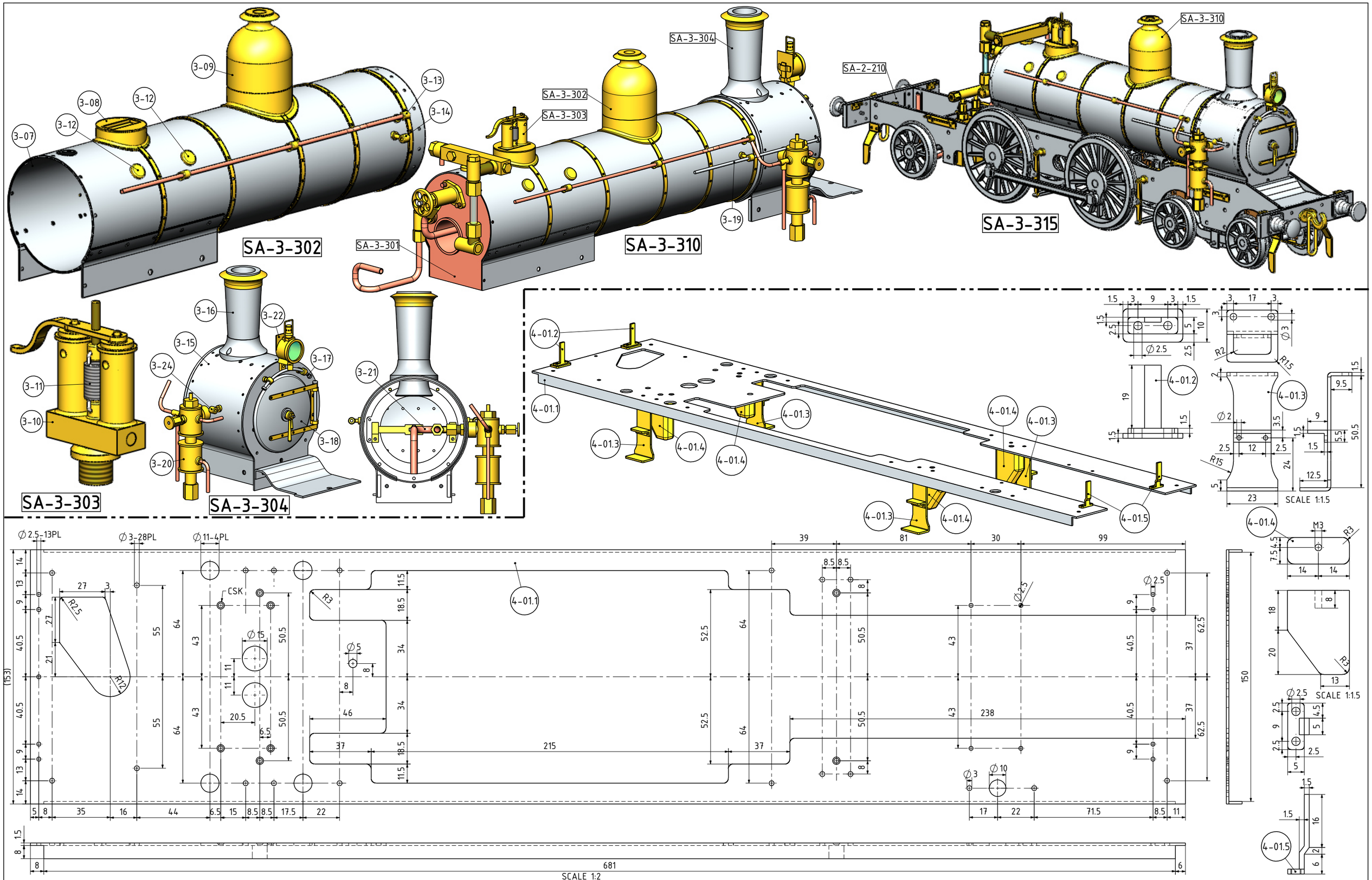


NOTES: THE ORIGINAL DESIGN WAS PUBLISHED IN THE "MODELBOUWER" MAGAZINES 3 TO 8 (2002) DRAWING NUMBER SERIES 20.00.39 SHT01 TO 22. DATED JULY 1996. DRAWN BY G.WIEGERINCK.

TITLE
# A GAS FIRED MODEL STEAM LOCOMOTIVE OF THE DUTCH RAILWAYS SERIES 5500

DRAWING CONTENTS
## PARTS AND ASSEMBLIES

PROJECT No 07A-01-00

JDW DRAUGHTING SERVICES
J.A.M. DE WAAL. 12 BRIGHTWELL STREET PAPAKURA 2110. NEW ZEALAND. PHONE: 0064 09 2988815. MOB: 0211791000 E-MAIL: dewaal@xtra.co.nz.

PROJECTION JDWDS

DATE DECEMBER 2020

MODEL SCALE: 1:16 (89mm/3.5" GAUGE)
DWG SCALE: 1:1 @A3 OR AS SHOWN

Copyright © J.A.M. DE WAAL PAPAKURA NZ

SHEET: 10 OF 15 A3 No: 07A-01-00-SHT10

DRAWINGS ARE FOR PERSONAL USE ONLY NOT FOR COMMERCIAL PURPOSES