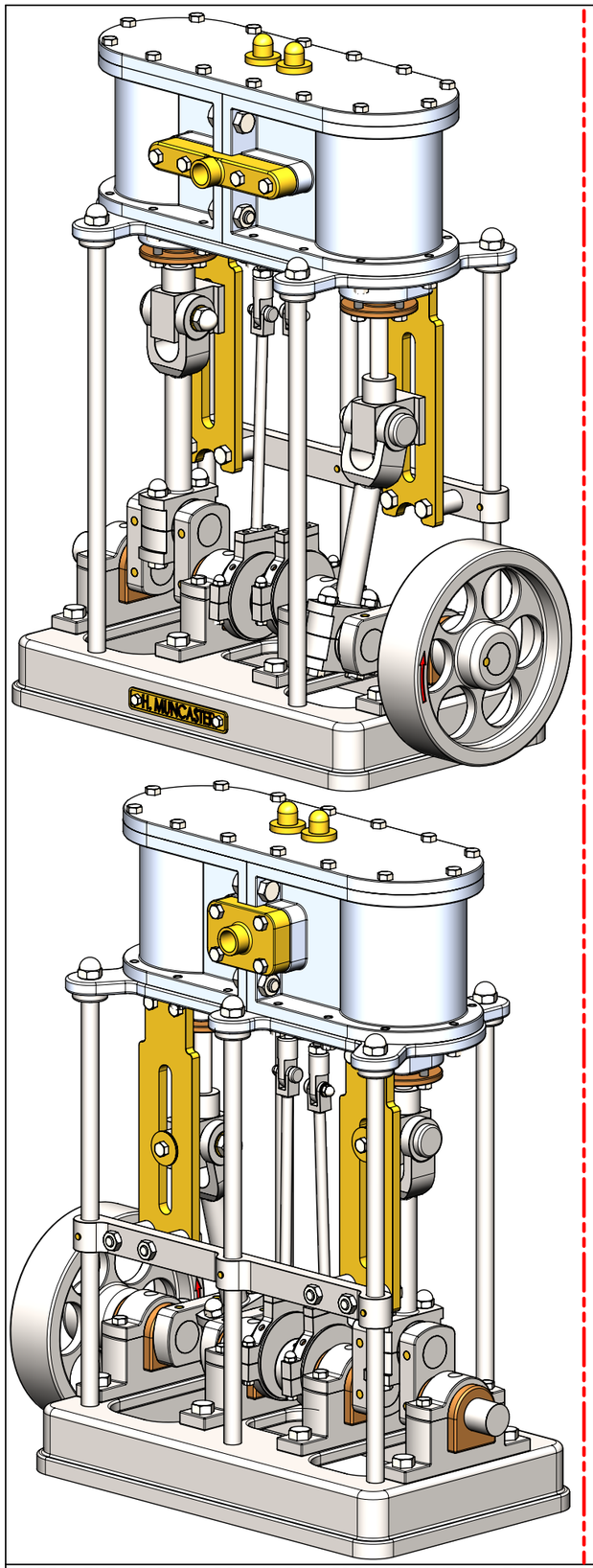


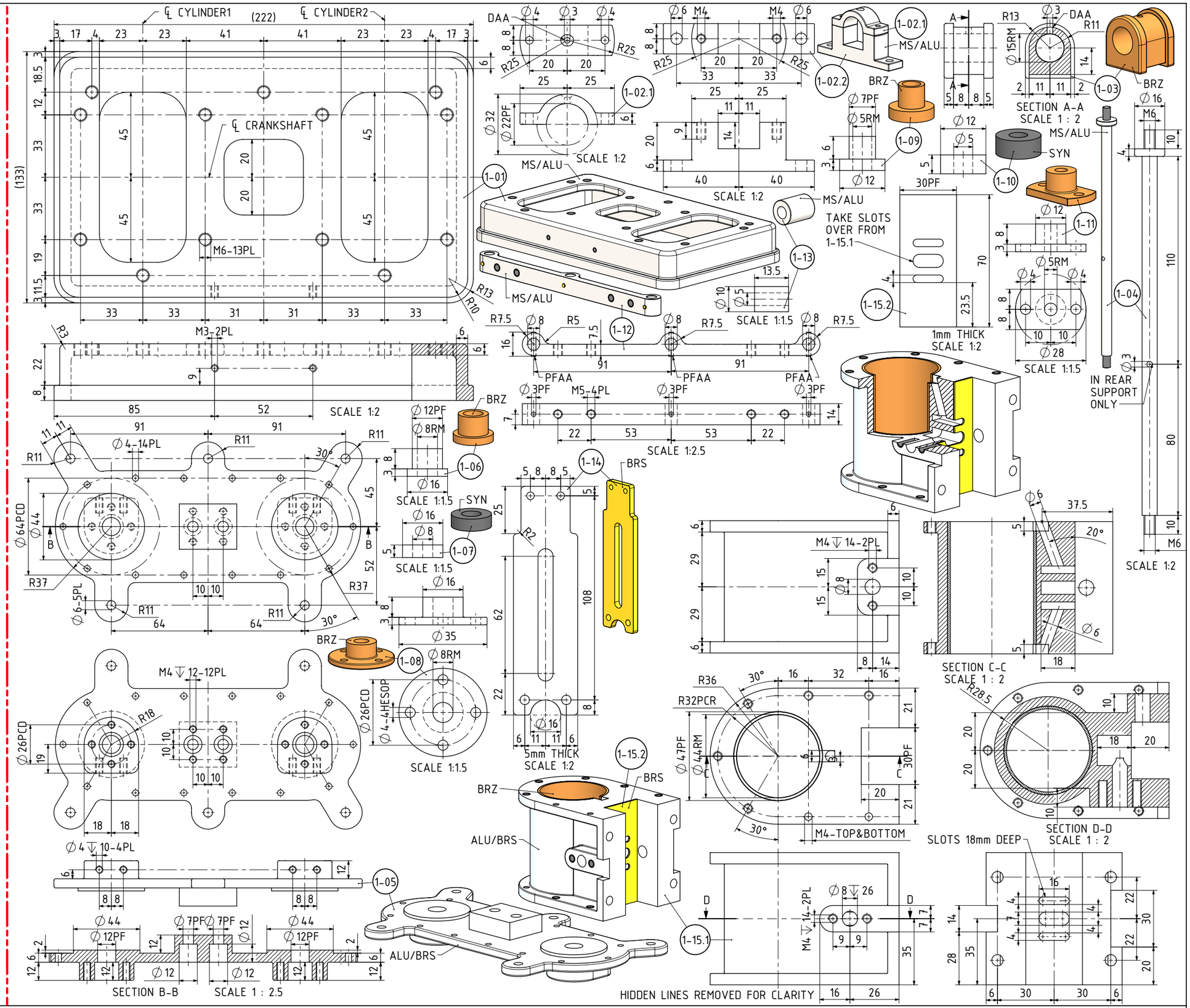


NOTES: THE ORIGINAL DRAWINGS WERE PUBLISHED IN THE "MODEL ENGINEER" MAGAZINE OF FEBTUARY 1957 UNDER THE HEADING OF "THE MUNCASTER STEAM-ENGINE MODELS".

| | | | |
|---|---|---|---|
| TITLE<br>2 CYLINDER SIMPLE VERTICAL STEAM ENGINE BY H.MUNCASTER. | DRAWING CONTENTS<br>ISOMETRIC VIEWS, PARTS AND ASSEMBLIES | PROJECT No 11-06-01<br>JDW DRAUGHTING SERVICES<br>J.A.M. DE WAAL. 12 BRIGHTWELL STREET PAPAKURA 2110. NEW ZEALAND. PHONE: 0064 09 2988815. MOB: 0211791000 E-MAIL: dewaal@xtra.co.nz. | PROJECTION JDWDS<br>DATE JUNE-2017<br>SHEET: 02 OF 04 |
| | | MODEL SCALE: 1:1<br>DWG SCALE: 1:1 @A3 OR AS SHOWN<br>Copyright © J.A.M. DE WAAL PAPAKURA NZ | A3 No:MUNCASTER6.1-02 |