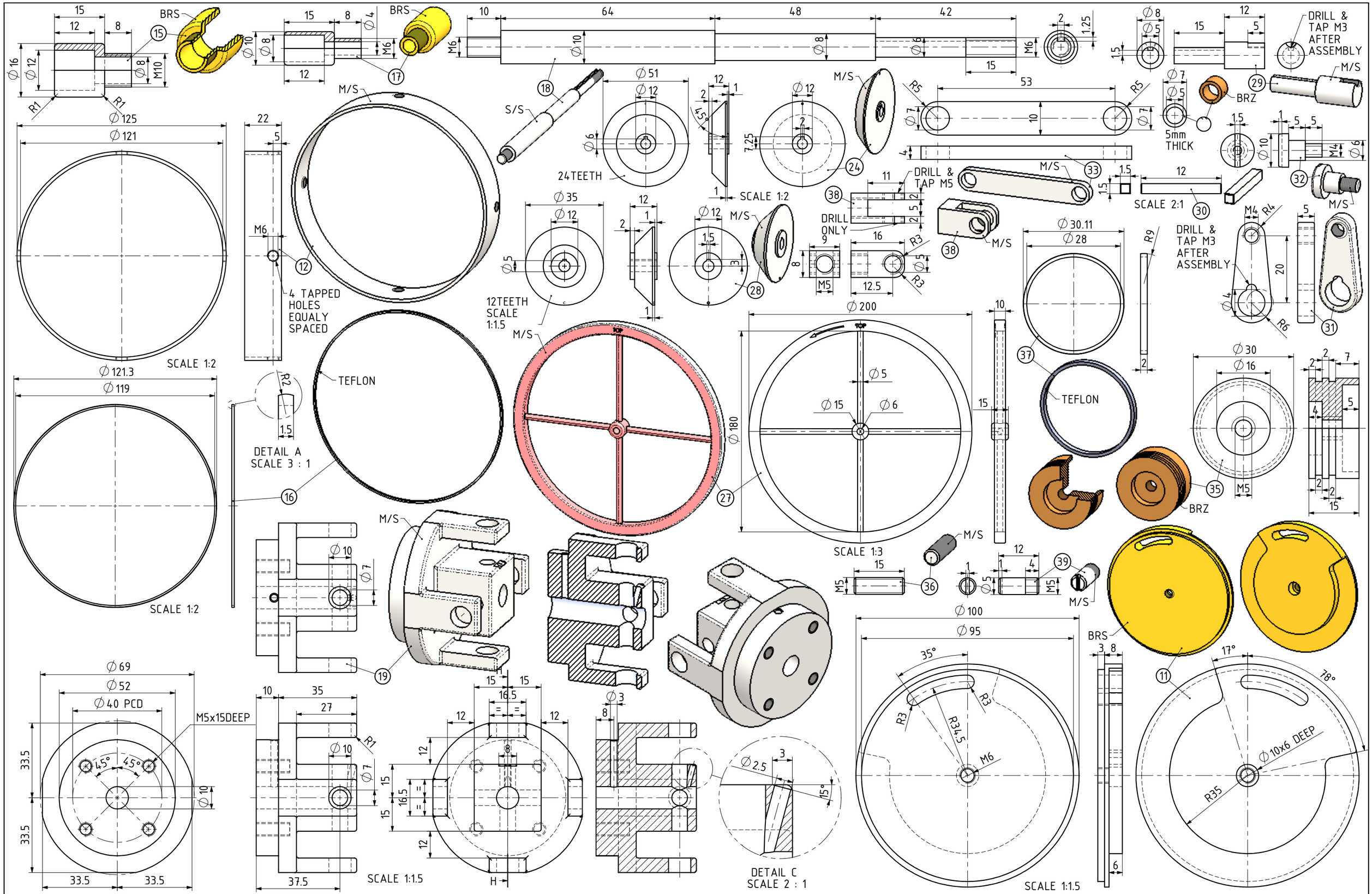

TITLE

EXPERIMENTAL HORIZONTAL FOUR CYLINDER STEAM ENGINE WITH ROTATING VALVE DISC

DRAWING CONTENT

SECTION H-H
SCALE 1 : 1.5

PARTS AND ASSEMBLIES

JDW DRAUGHTING SERVICES
12 BRIGHTWELL STREET
PAPAKURA NEW ZEALAND
TEL/FAX 0064-09-2988815
E-MAIL:dewaal@xtra.co.nz

DRAWN BY	PROJECTION	DRAWING NUMBER
J.A.M. DE WAAL		FCCC-03
DATE	SCALE	SHT of SHT
MARCH 2009	1:1@A3 OR AS SHOWN	03 of 04

A3