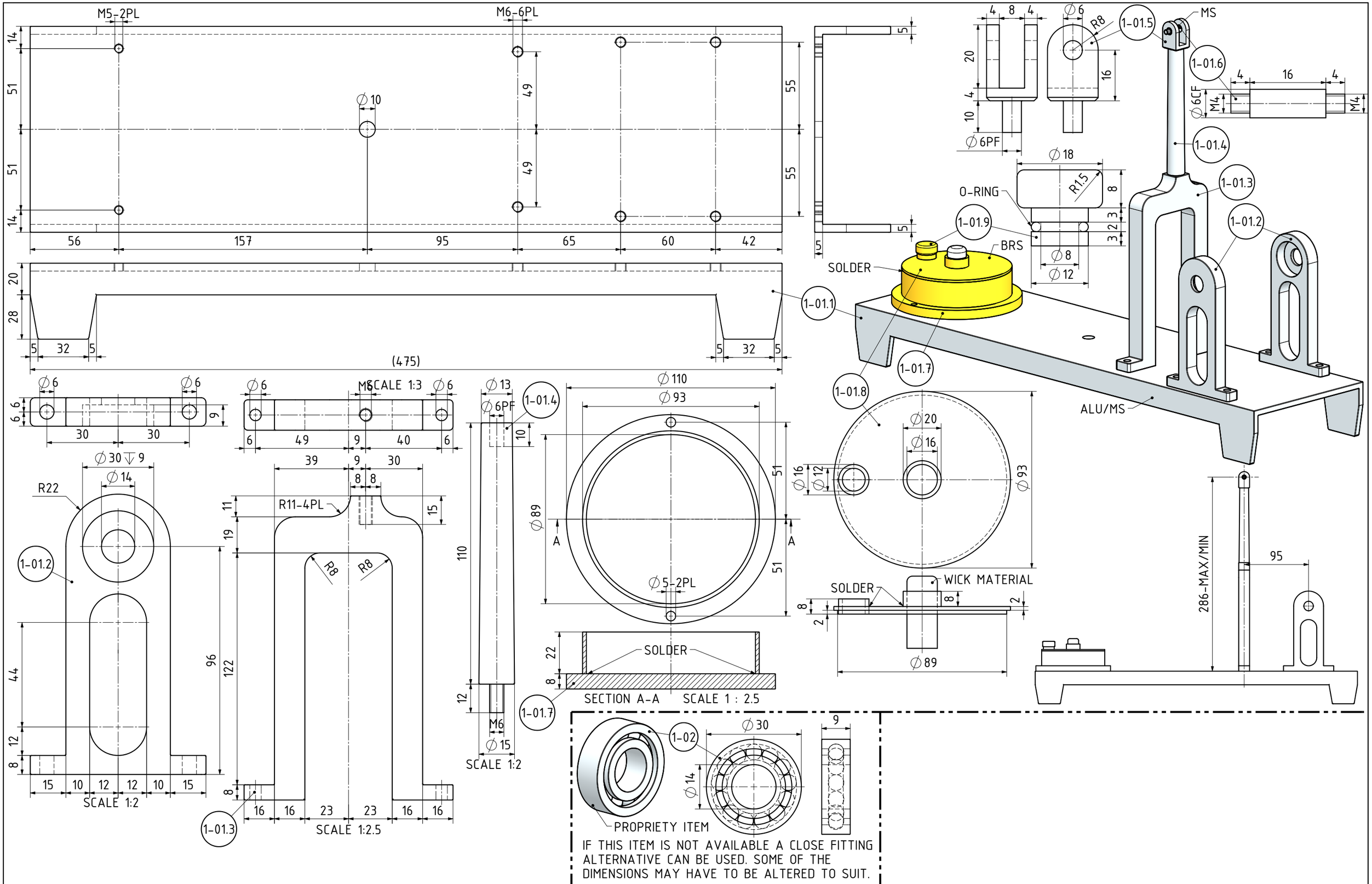

NOTES: THE ORIGINAL DRAWINGS WERE GIVEN TO ME. THE ORIGINAL DRAWINGS WERE MADE BY R.F.TUPER, AND DATED AUGUST 2010.

TITLE STIRLING ENGINE SCOTCH YOKE TYPE	DRAWING CONTENTS PARTS AND ASSEMBLIES	PROJECT No 05A-15-00 JDW DRAUGHTING SERVICES J.A.M. DE WAAL. 12 BRIGHTWELL STREET PAPAKURA 2110. NEW ZEALAND. PHONE: 0064 09 2988815. MOB: 0211791000 E-MAIL: dewaal@xtra.co.nz.	PROJECTION JDWDS DATE AUGUST 2020 SHEET: 03 OF 06
			MODEL SCALE: 1:1 DWG SCALE: 1:1 @A4 OR AS SHOWN Copyright © J.A.M. DE WAAL PAPAKURA NZ A4 No: 05A-15-00-SHT03

DRAWINGS ARE FOR PERSONAL USE ONLY NOT FOR COMMERCIAL PURPOSES