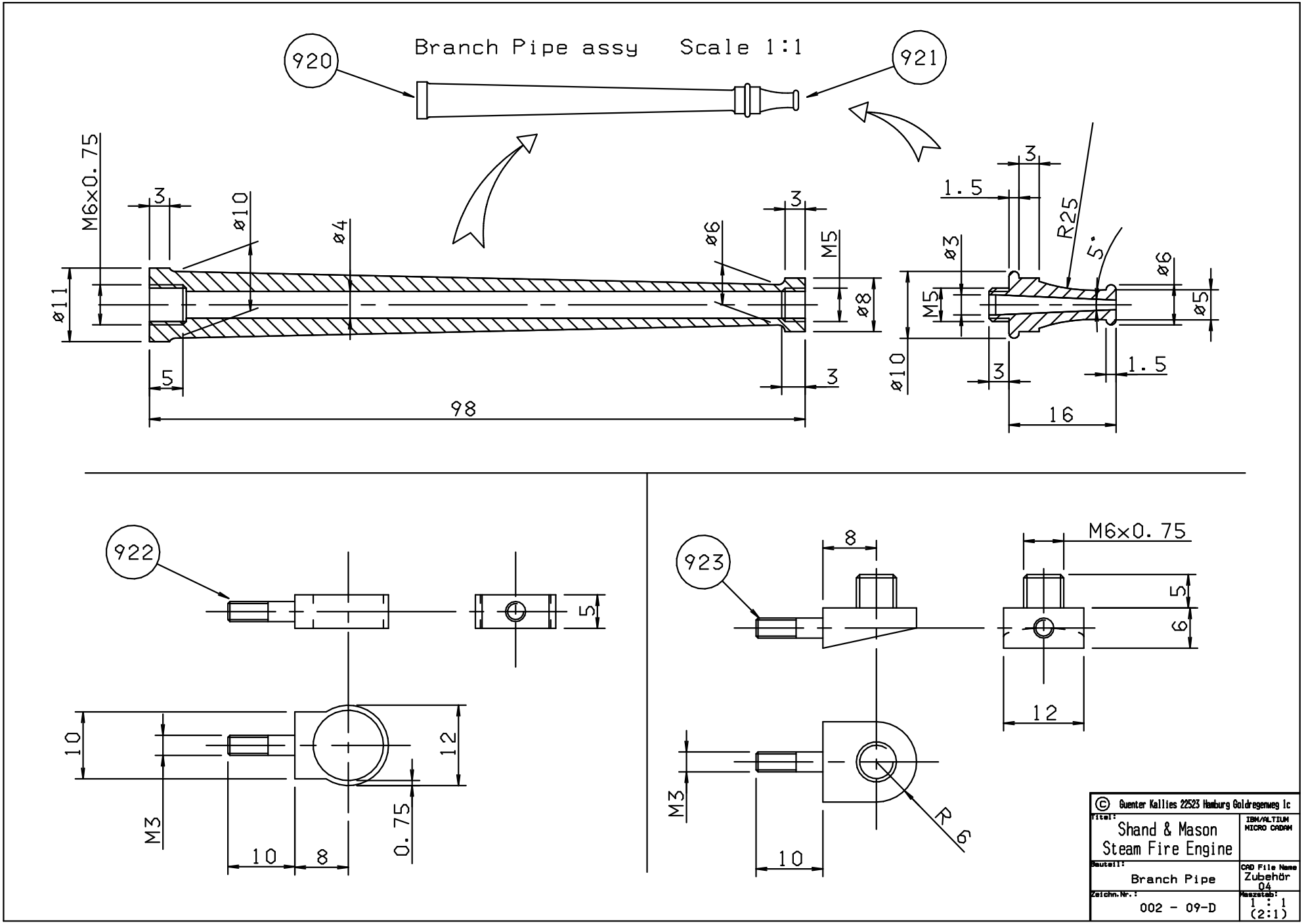
Branch Pipe assy Scale 1:1
920
921
922
923
M6x0.75
3
ø10
ø4
ø6
M5
ø8
ø11
5
98
1.5
R25
5°
ø3
ø5
ø10
16
10
12
M3
0.75
8
R 6
© Guenter Kallies 22523 Hamburg Goldregenweg 1c
Titel:
Shand & Mason
Steam Fire Engine
IBM/ALTIUM
MICRO CADAM
Bauteil:
Branch Pipe
CAD File Name
Zubehör
04
Zeichn.Nr.:
002 - 09-D
Maszstab:
1 : 1
(2:1)