| QTY. | PART NUMBER |
|---|---|
| 1 | 1CHSE-01-WOODEN BASE |
| 1 | 1CHSE-02A-BASE FRAME |
| 1 | 1CHSE-02B-BASE FRAME |
| 1 | 1CHSE-03-VALVE CHAMBER |
| 1 | 1CHSE-04-VALVE CHAMBER COVER |
| 1 | 1CHSE-05-CYLINDER |
| 1 | 1CHSE-06-CYLINDER COVER |
| 1 | 1CHSE-07-CRANKSHAFT BEARING |
| 1 | 1CHSE-08-CRANKSHAFT |
| 1 | 1CHSE-09-ECCENTRIC SHEAVE |
| 1 | 1CHSE-10-FLYWHEEL |
| 1 | 1CHSE-11-ECCENTRIC STRAP |
| 1 | 1CHSE-12-SLIDE VALVE |
| 1 | 1CHSE-13-PISTON |
| 1 | 1CHSE-14-CON-ROD |
| 1 | 1CHSE-M2x8 GRUB SREW |
| 3 | 1CHSE-M3x10-WOOD SCREW |
| 1 | 1CHSE-M25x3.5 GRUB SREW |

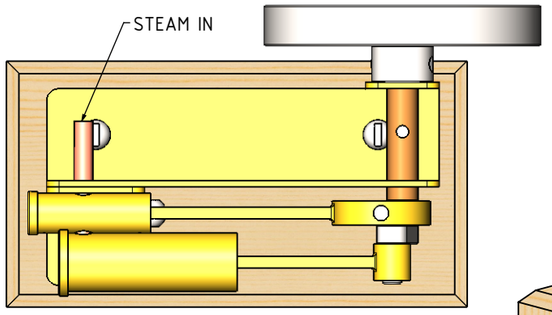


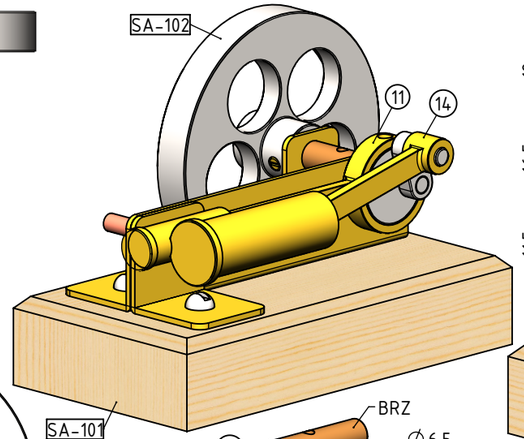


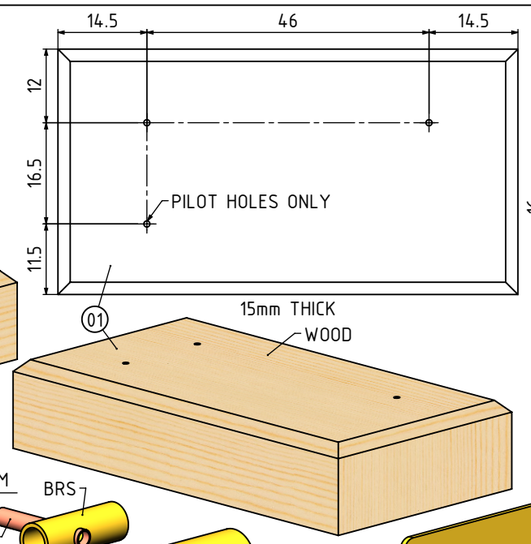


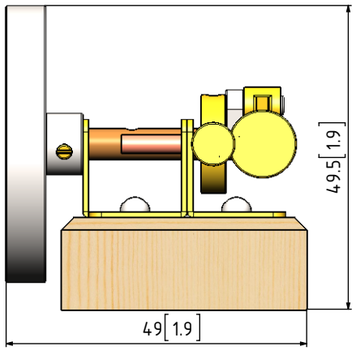


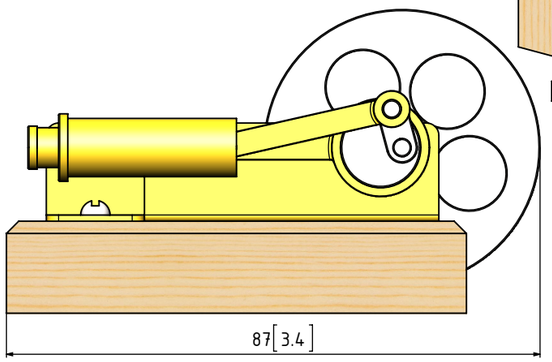


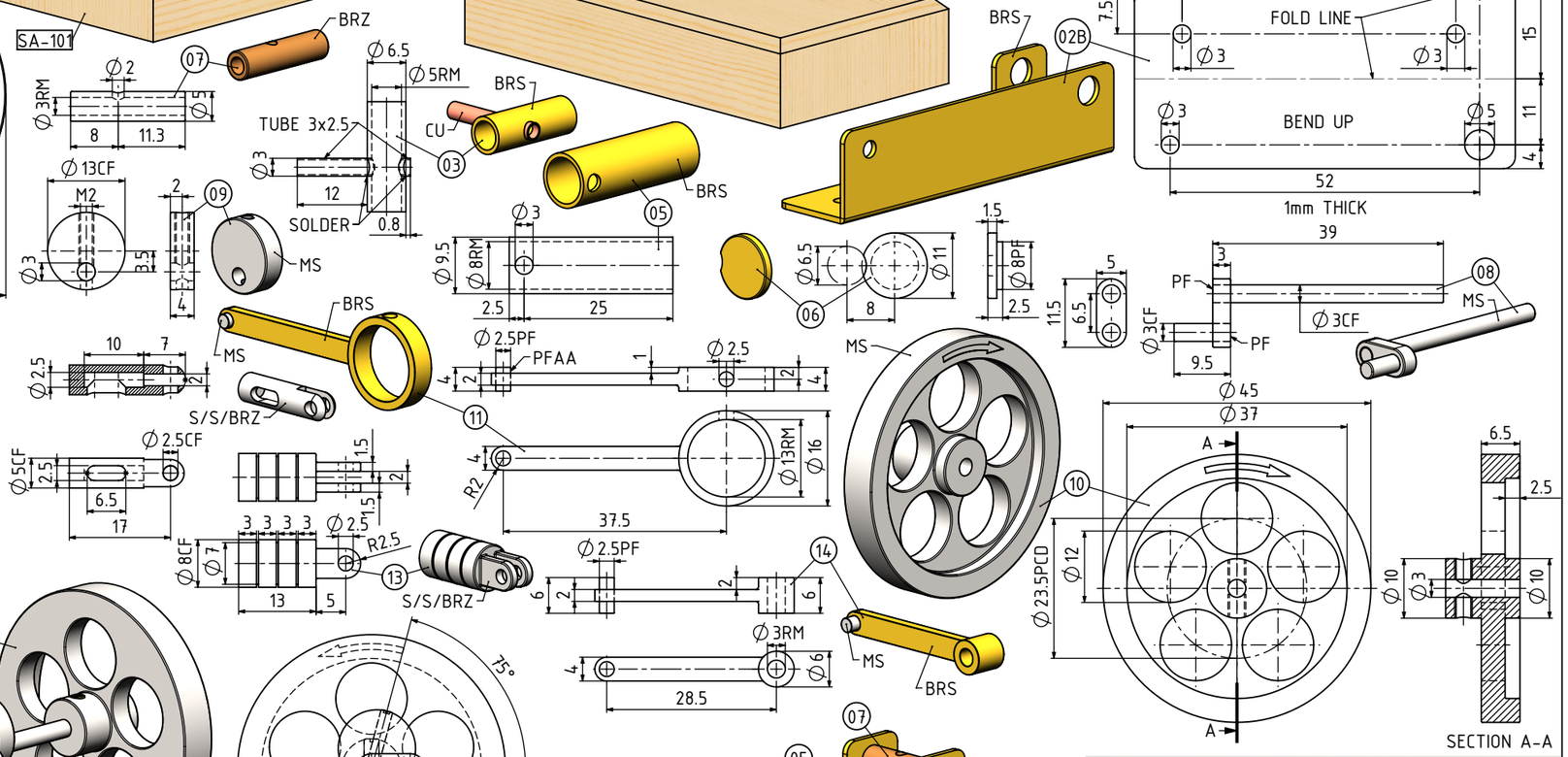


NOTES:
0. ALL DRAWINGS ARE IN METRIC MEASUREMENTS
1. ALL ENGINEERING PRACTICES SHALL BE APPLIED WITH REGARDS TO HOLE AND SHAFT TOLERANCES.
2. WHERE SCREWS OR BOLTS ARE USED THE CLEARANCE HOLES SHALL BE APPROXIMATELY 5% TO 8% LARGER THAN THE MATCHING TAPPED HOLE.
3. PREFERABLY ALL TAPPED HOLES AND MATCHING SCREWS AND/OR BOLTS TO BE METRIC FINE (MF)
4. MATERIALS SPECIFIED ON THE DRAWINGS ARE INDICATIVE ONLY. THE BUILDER CAN MAKE HIS/HER OWN MATERIAL CHOICE.
5. ALL CONNECTIONS/JOINTS WHICH HAVE STEAM PRESSURE APPLIED TO IT SHALL BE SILVER/HARD SOLDERED.
6. COMPRESSION SPRINGS ARE DRAWN IN COMPRESSED STATE (CP), UNCOMPRESSED STATE IS APPROX 40% TO 60% LONGER THEN COMPRESSED STATE.
7. WHERE PREFERRED SCREW OR RIVETED CONNECTIONS CAN BE OMITTED AND PARTS CAN BE BONDED TOGETHER BY USING EITHER HIGH STRENGTH GLUE, EPOXY RESIN, OR SOLDER.
8. PARTS WHICH ARE DIRECTLY EXPOSED TO STEAM AND/OR WATER SHOULD BE CONSTRUCTED USING NON-FERROUS OR NON CORROSIVE MATERIAL SUCH AS BRASS, BRONZE, GUNMETAL, STAINLESS STEEL, COPPER OR MONEL.
9. THE ORDER IN WHICH THE PARTS/COMPONENTS ARE MANUFACTURED AND THE MODEL IS ASSEMBLED IS ENTIRELY LEFT TO THE BUILDER/MODEL MAKER.
10. A COLOUR SCHEME FOR THIS PROJECT IS ENTIRELY LEFT UP TO THE MODEL MAKER.
11. THE MANNER IN WHICH THE PARTS/COMPONENTS ARE MANUFACTURED IS ENTIRELY LEFT UP TO THE BUILDER.
12. USE LOCTITE, ON SCREW OR PRESS FIT CONNECTIONS OR SURFACES, WERE DEEMED NECESSARY TO PREVENT PARTS FROM LOOSENING.
XX. ERRORS AND/OR OMISSIONS MAY OCCUR IN THE DRAWINGS, DO NOT HESITATE TO CONTACT ME SO THAT THE ERRORS/OMISSIONS CAN BE RECTIFIED.

OTHER ABBREVIATIONS
DP = DEEP
DAA= DRILL AFTER ASSEMBLY
D&TAA= DRILL AND TAP AFTER ASSEMBLY
CF = CLOSE FIT (SIZE FOR SIZE)
PF = PRESS FIT
PFAA= PRESS FIT AFTER ASSEMBLY
PCD = PITCH CIRCLE DIAMETER
RM = REAM
HEX = HEXACON, 6SIDED
CP = COMPRESSED
KNL = KNURLED
CSK = COUNTERSINK
PL = PLACES
DWL= DOWEL
HESOP=HOLES EQUALLY SPACED ON PCD
SA-n-xxx = SUB ASSEMBL-n-xxx

MATERIAL ABBREVIATIONS:
ALU = ALUMINIUM
BRS = BRASS
BRZ = BRONZE OR GUNMETAL (BRZ/GM)
CI = CAST IRON
CU = COPPER
GRA = GRAPHITE
MS = MILD STEEL/BRIGHT MILD STEEL
S/S = SILVER STEEL OR STAINLESS STEEL
SPS = SPRING STEEL
PEEK= POLYETHER ETHER KETONE
SYN = SYNTHETIC MATERIAL SUCH AS VETON, NYLON, TEFLON OR RUBBER
IN GENERAL SYNTHETIC MATERIALS SOULD BE ABLE TO WITHSTAND THE HEAT AND PRESSURE(S) APPLIED TO THEM.
nnn/nnn MEANS THAT EITHER MATERIAL CAN BE USED

THE OFF SET ANGLE OF THE ECCENTRIC IN RELATION TO THE CRANK AXIS TO BE EXPERIMENTALLY DETERMINED FOR THE SMOOTH RUNNING OF THE ENGINE AND TO THE SATISFACTION OF THE BUILDER

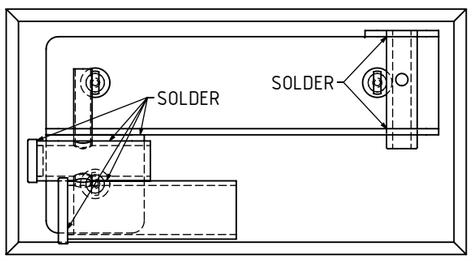


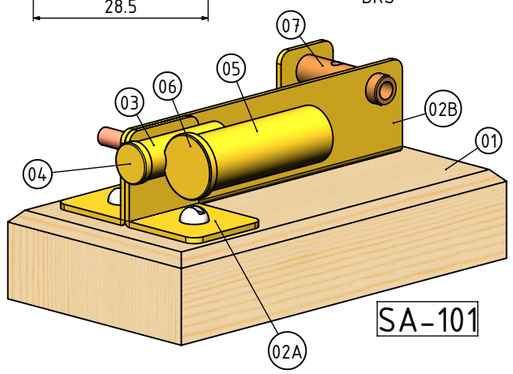


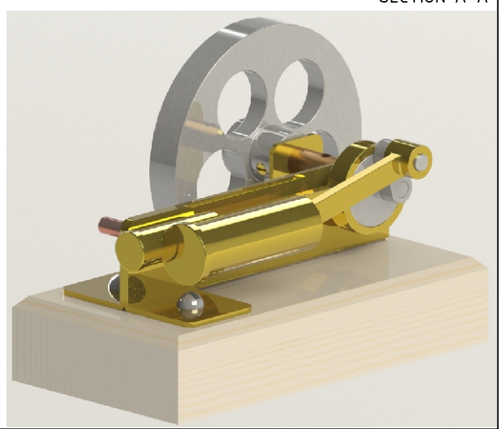

NOTES: THE ORIGINAL DRAWINGS WERE OBTAINED FROM THE INTERNET. ORIGINAL DRAWINGS AND ARTICLE APPEARED IN THE MAGAZINE "POPULAR SCIENCE" OF 19?? UNDER HEADING "FUN WITH STEAM ENGINES" BY ALEXANDER MAXWELL

| TITLE | DRAWING CONTENTS | PROJECT No: 09B-14-00 | PROJECTION JDWDS | MODEL SCALE: 1:1 |
|---|---|---|---|---|
| SIMPLE HORIZONTAL STEAM ENGINE FOR BEGINNERS | G.A, ISOMETRIC VIEW, BOM, NOTES, PARTS AND ASSEMBLIES | JDW DRAUGHTING SERVICES<br>J.A.M. DE WAAL 12 BRIGHTWELL STREET PAPAKURA 2110 NEW ZEALAND. PHONE 0064 09 2988815 MOB 0211791000<br>E-MAIL: dewaal@xtra.co.nz | DATE AUGUST-2016 | DWG SCALE: 1:1@A3 OR AS SHOWN |
| | | | SHT 01 OF 01 | A3 |

COPYRIGHT © J.A.M. DE WAAL PAPAKURA NZ

DWG No 1CHSE-AM-01