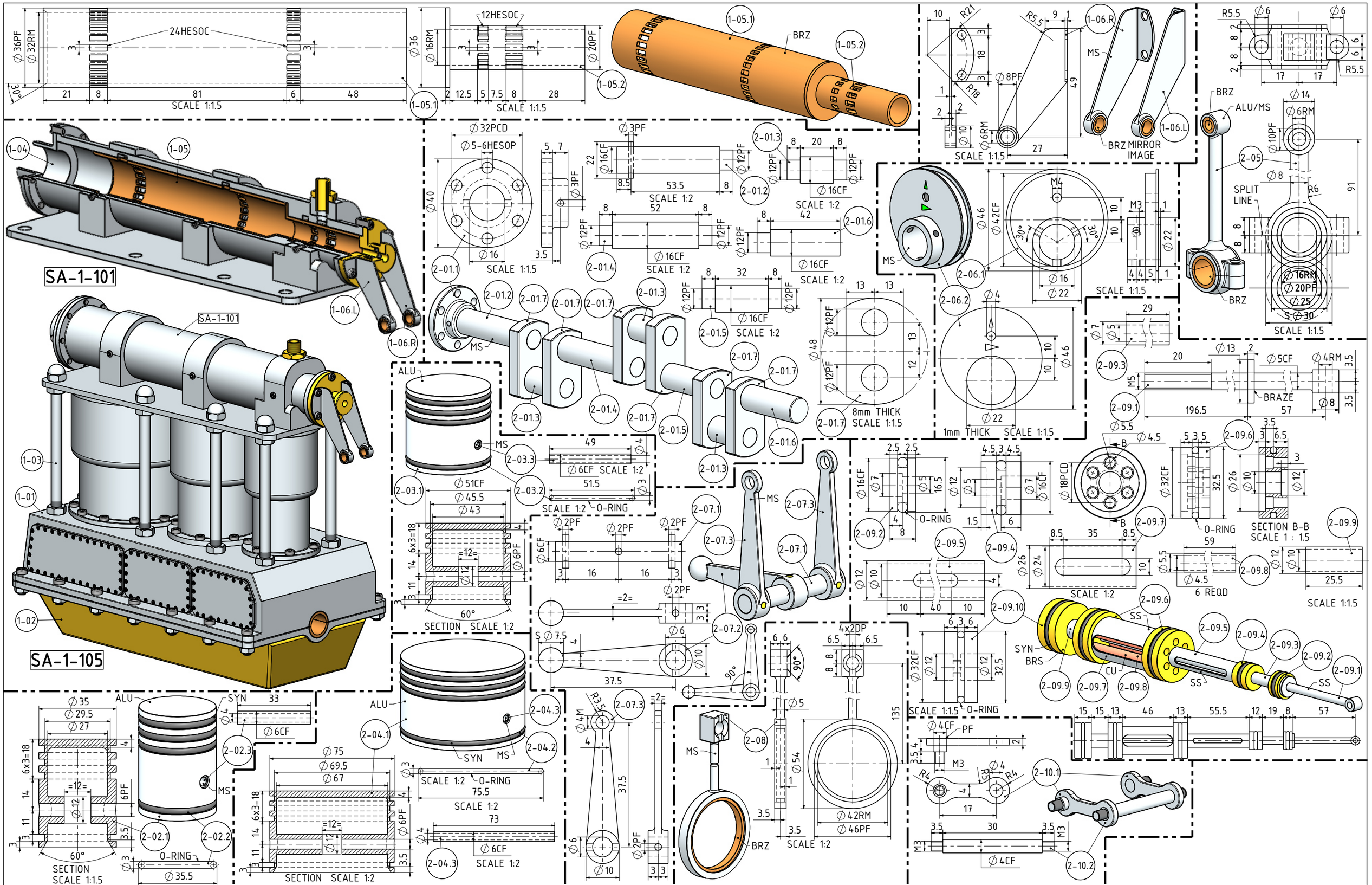

NOTES: THE ORIGINAL DRAWING WAS GIVEN TO ME. THE ORIGINAL DRAWING WAS PRINTED IN THE "MARINE ENGINES" MAGAZINE PAGE 1,078, DTAE UNKNOWN.

TITLE
A SIMPLE EXPERIMENTAL TRIPLE EXSPANSION NON REVERSING STEAM ENGINE (HP-B=35, IP-B=51, LP-B=75mm, S=50mm)

DRAWING CONTENTS
PARTS AND ASSEMBLIES

PROJECT No 09D-24-00

JDW DRAUGHTING SERVICES
J.A.M. DE WAAL. 12 BRIGHTWELL STREET PAPAKURA 2110. NEW ZEALAND. PHONE: 0064 09 2988815. MOB: 0211791000 E-MAIL: dewaal@xtra.co.nz.

PROJECTION JDWDS

DATE JULY 2021

MODEL SCALE: 1:1
DWG SCALE: 1:1 @A3 OR AS SHOWN

Copyright © J.A.M. DE WAAL PAPAKURA NZ

SHEET: 04 OF 05 | A3 | No: 09D-24-00-SHT04

DRAWINGS ARE FOR PERSONAL USE ONLY NOT FOR COMMERCIAL PURPOSES