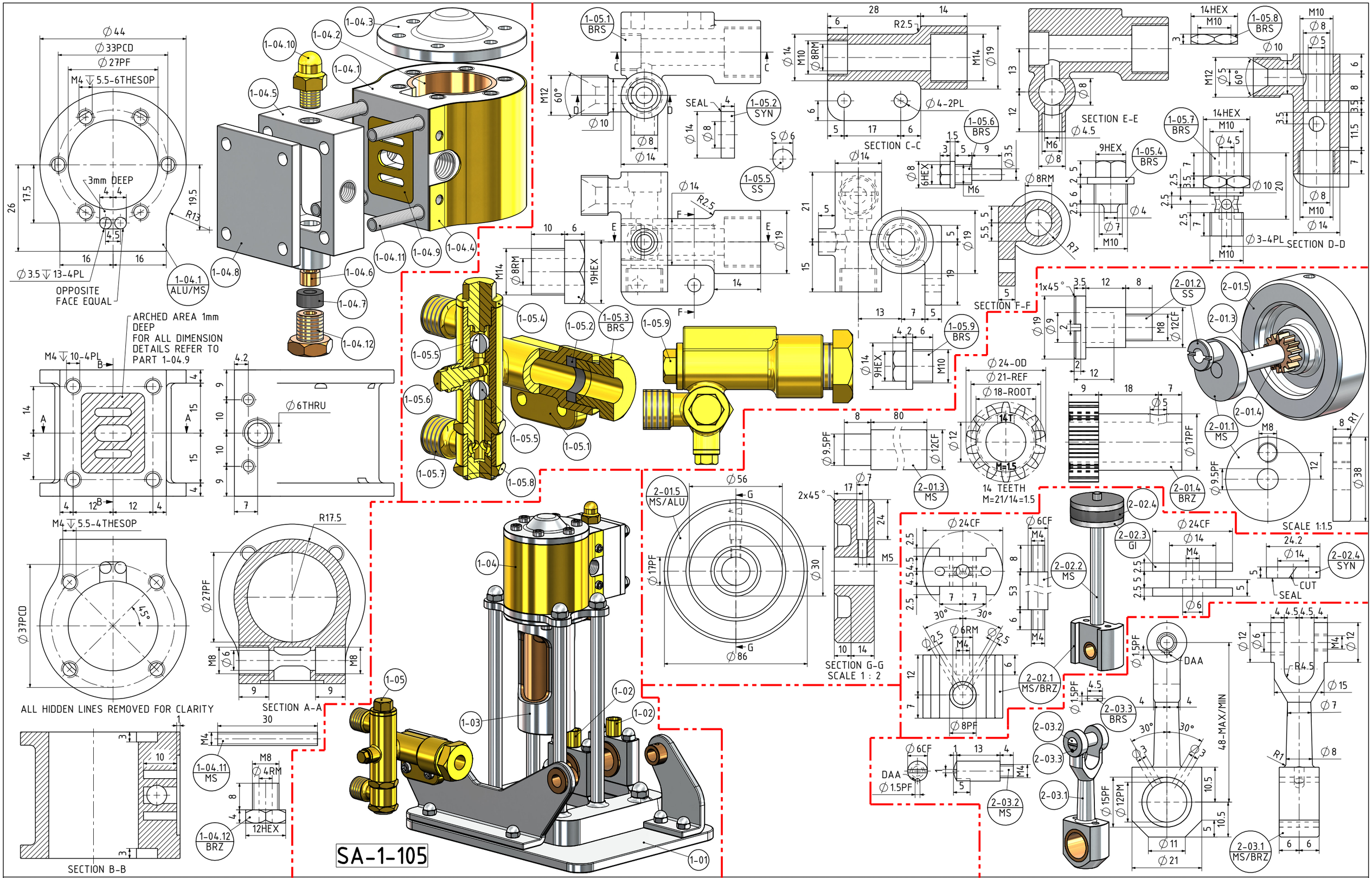

NOTES: THE ORIGINAL DRAWINGS WERE GIVEN TO ME. THE DESIGN AND DRAWINGS WERE PUBLISHED IN "MODEL ENGINEER" MAGAZINE FROM JUNE 1978 TO FEBRUARY 1979, UNDER THE TITLE "MORE UTILITY STEAM ENGINES" BY J. P. BERTNAT. THIS ENGINE IS CALLED "TROJAN MARK 2" THE ENGINE SHOWN ON THESE DRAWINGS IS 1.5 TIMES THE ORIGINAL

TITLE
1 CYLINDER VERTICAL NON REVERSABLE STEAM ENGINE WITH WATER FEED PUMP

DRAWING CONTENTS
PARTS AND ASSEMBLIES

PROJECT No 09C-67-00

JDW DRAUGHTING SERVICES
J.A.M. DE WAAL. 12 BRIGHTWELL STREET PAPAKURA 2110. NEW ZEALAND. PHONE: 0064 09 2988815. MOB: 0211791000 E-MAIL: dewaal@xtra.co.nz.

PROJECTION

JDWDS

DATE FEBRUARY 2025

MODEL SCALE: 1:1
DWG SCALE: 1:1 @A3 OR AS SHOWN

Copyright © J.A.M. DE WAAL PAPAKURA NZ

SHEET: 03 OF 04 | A3 | No:09C-67-00-SHT-03

DRAWINGS ARE FOR PERSONAL USE ONLY NOT FOR COMMERCIAL PURPOSES