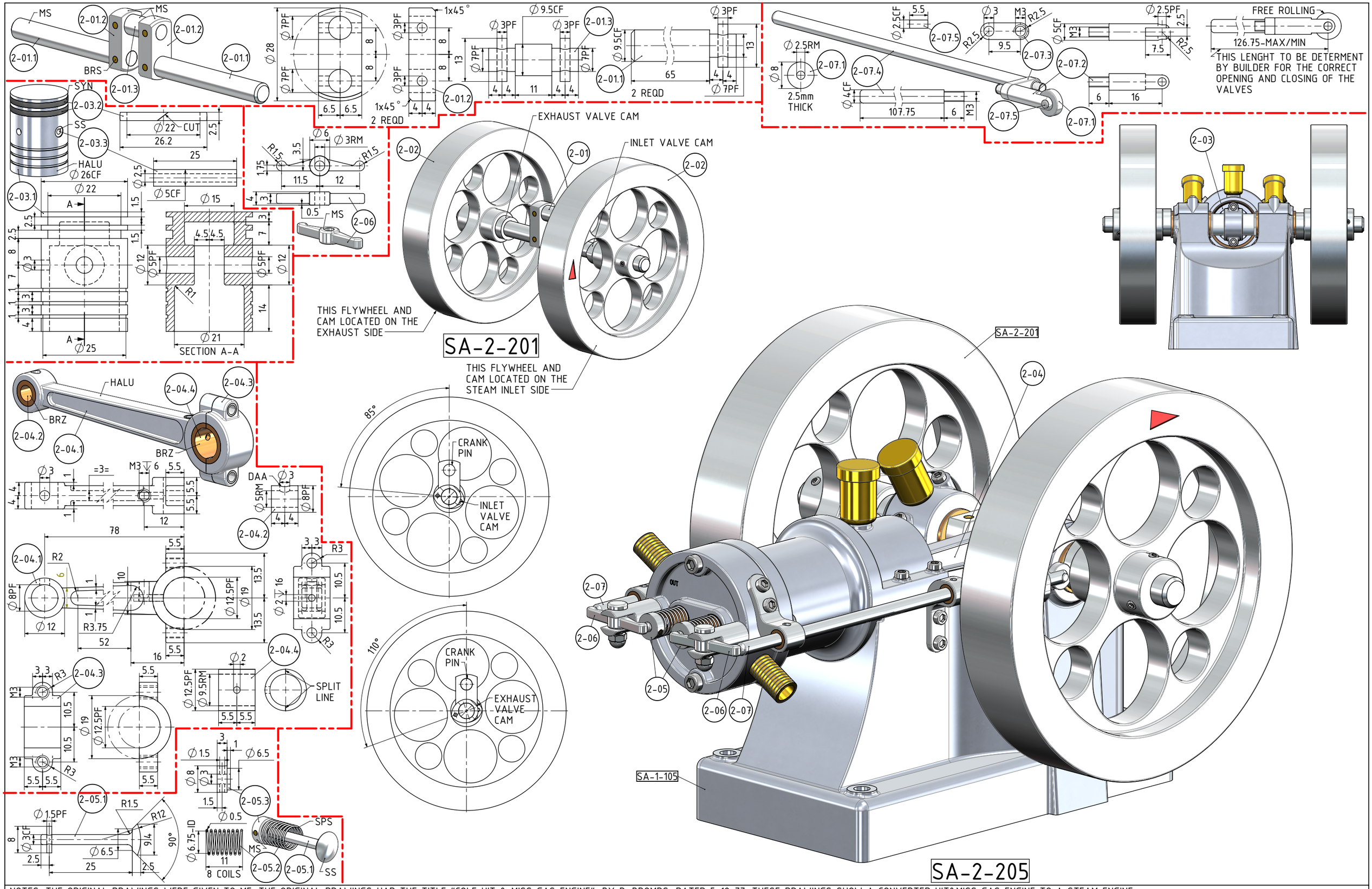

NOTES: THE ORIGINAL DRAWINGS WERE GIVEN TO ME. THE ORIGINAL DRAWINGS HAD THE TITLE "COLE HIT & MISS GAS ENGINE", BY R. BROMPS, DATED 5-12-77. THESE DRAWINGS SHOW A CONVERTED HIT&MISS GAS ENGINE TO A STEAM ENGINE

TITLE EXPERIMENTAL STEAM ENGINE CONVERTED FROM A HIT & MISS GAS ENGINE	DRAWING CONTENTS PARTS AND ASSEMBLIES	PROJECT No 09D-30-00 JDW DRAUGHTING SERVICES J.A.M. DE WAAL. 12 BRIGHTWELL STREET PAPAKURA 2110. NEW ZEALAND. PHONE: 0064 09 2988815. MOB: 0211791000 E-MAIL: dewaal@xtra.co.nz.	PROJECTION JDWDS DATE AUGUST 2024 SHEET: 03 OF 03
			MODEL SCALE: 1:1 DWG SCALE: 1:1 @A3 OR AS SHOWN Copyright © J.A.M. DE WAAL PAPAKURA NZ A3 No: 09D-30-00-SHT-03

DRAWINGS ARE FOR PERSONAL USE ONLY NOT FOR COMMERCIAL PURPOSES