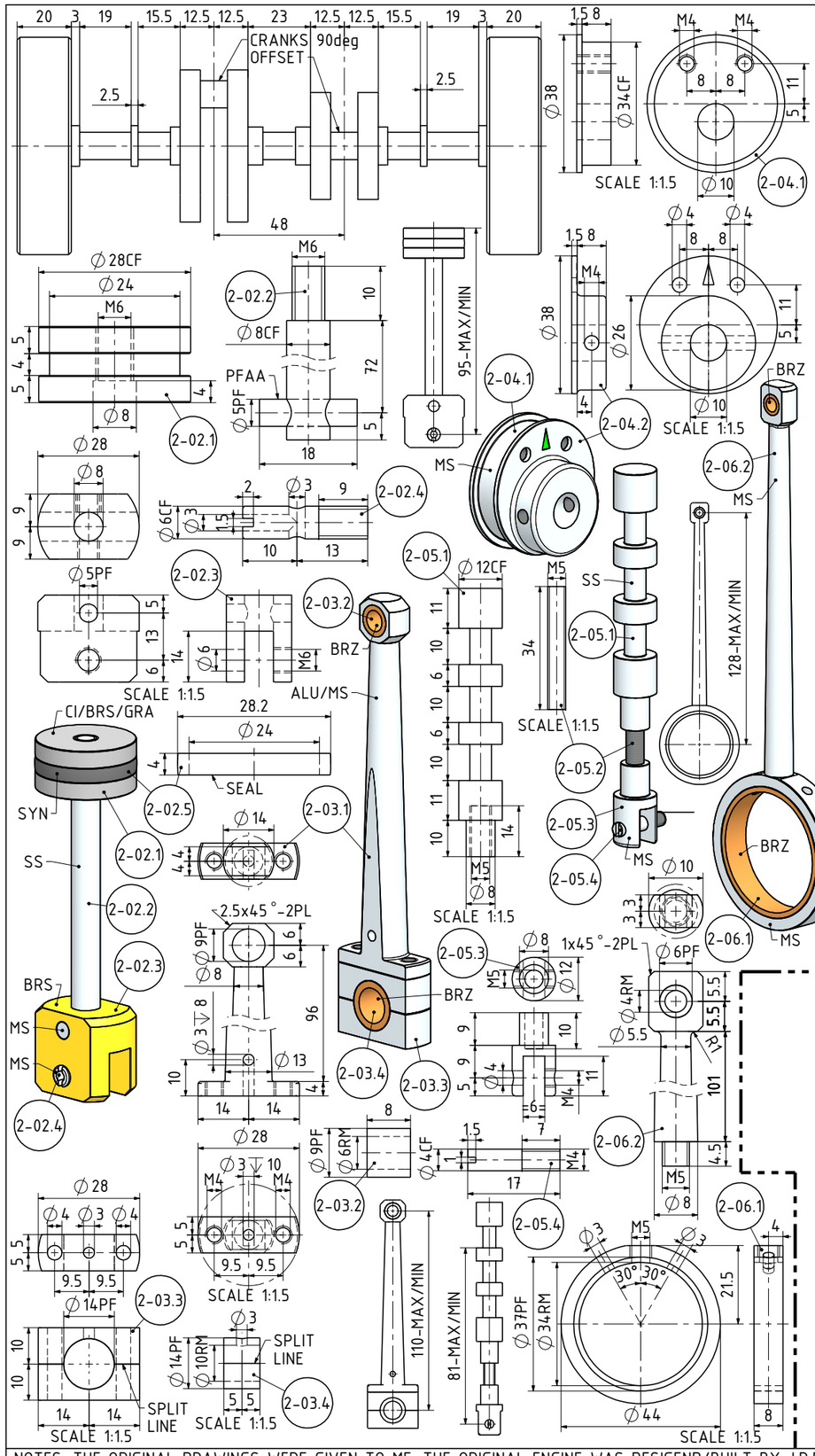

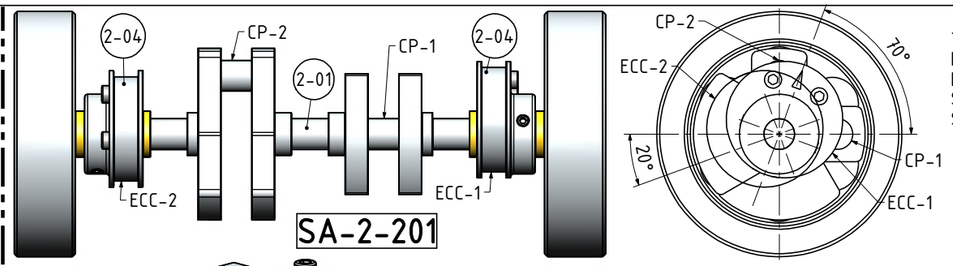

THE OFF SET ANGLE OF THE ECCENTRIC IN RELATION TO THE CRANK AXIS TO BE EXPERIMENTALLY DETERMINED FOR THE SMOOTH RUNNING OF THE ENGINE AND SATISFACTION OF THE BUILDER

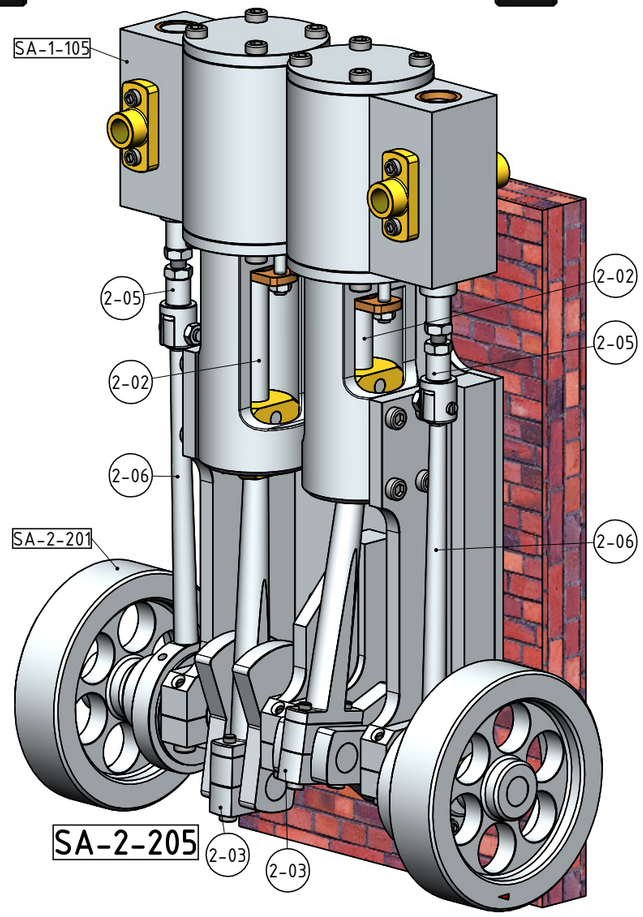

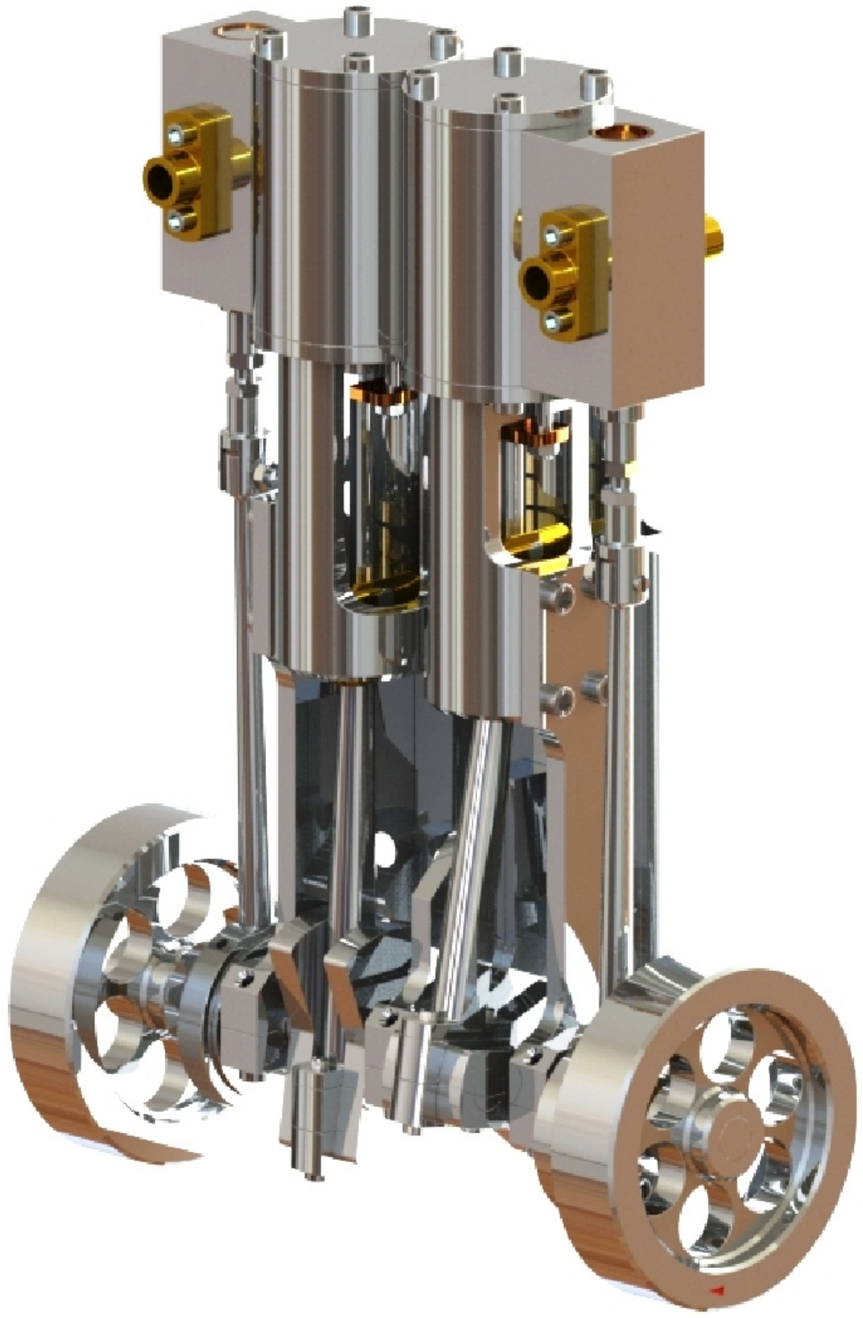

NOTES: THE ORIGINAL DRAWINGS WERE GIVEN TO ME. THE ORIGINAL ENGINE WAS DESIGEND/BUILT BY J.P.DUVAL (LUSSAN) DRAWING NUMBER(S) MVh TC 14/18 SHT 00-04 DATED 08/2006 THE ENGINE ON THESE DRAWINGS IS TWO TIMES THE ORIGINAL SIZE

TITLE A 2 CYLINDER VERTICAL WALL MOUNTED STEAM ENGINE (B=28mm S=38mm)	DRAWING CONTENTS PARTS AND ASSEMBLIES, RENDERED PICTURE	PROJECT No 09C-49-00 JDW DRAUGHTING SERVICES J.A.M. DE WAAL. 12 BRIGHTWELL STREET PAPAKURA 2110. NEW ZEALAND. PHONE: 0064 09 2988815. MOB: 0211791000 E-MAIL: dewaal@xtra.co.nz.	PROJECTION JDWDS DATE JULY 2020 SHEET: 03 OF 03 A3
			MODEL SCALE: 1:1 DWG SCALE: 1:1 @A3 OR AS SHOWN Copyright © J.A.M. DE WAAL PAPAKURA NZ No: 09C-49-00-SHT03

DRAWINGS ARE FOR PERSONAL USE ONLY NOT FOR COMMERCIAL PURPOSES