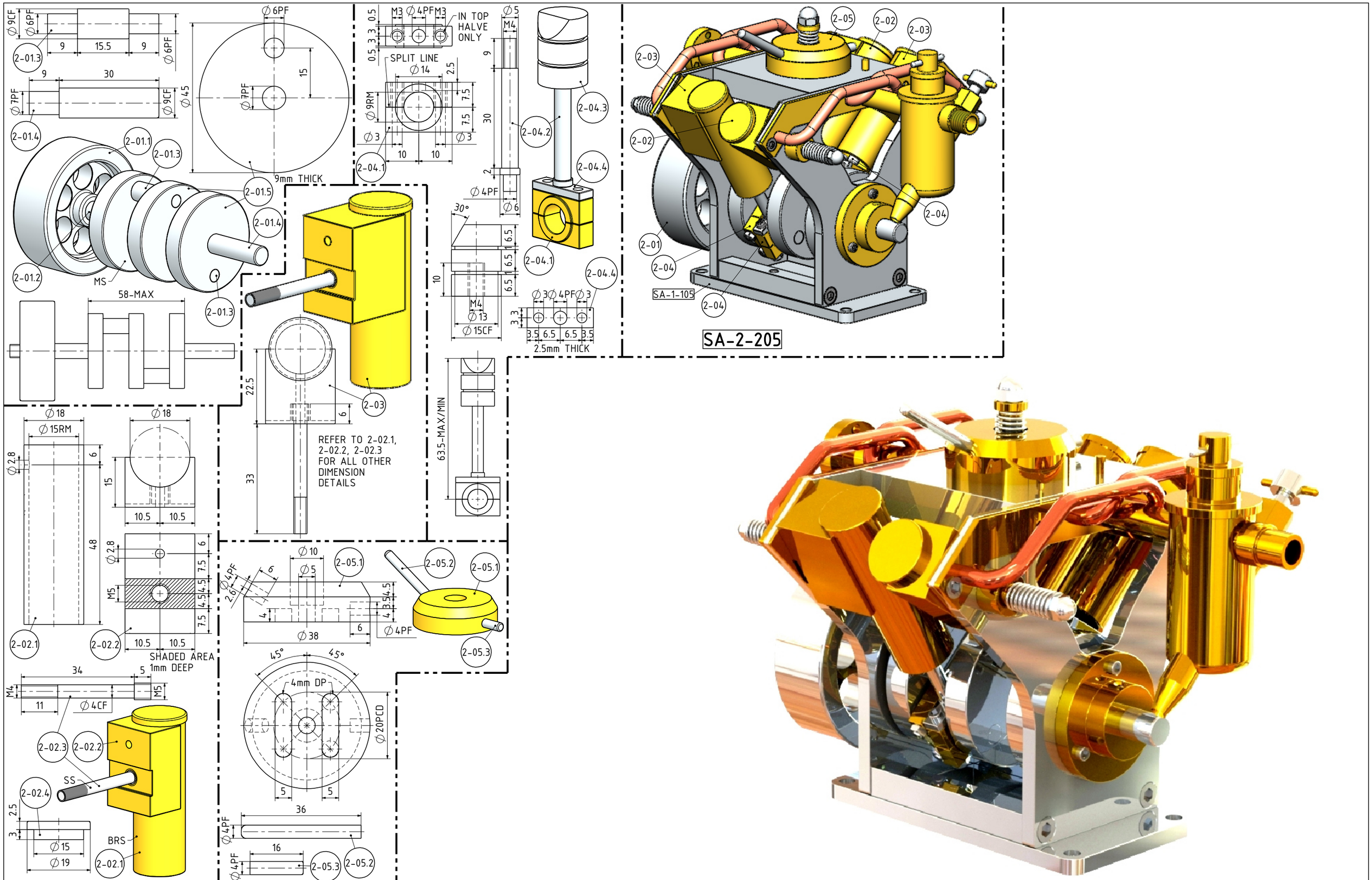

NOTES: THE ORIGINAL DRAWINGS WERE GIVEN TO ME. THE ORIGINAL DRAWINGS AND BUILDING INSTRUCTIONS WERE BY JAN GUNNARSSON. MAGAZINE UNKOWN. ARTICLE TITLE "BUILD THIS SIMPLE V-4 OSCILLATING CYLINDER ENGINE". THE EINGINE ON THESE DRAWING IS 1.5 LARGER

TITLE

A 4 CYLINDER V-SHAPED OSCILLATING STEAM ENGINE (B=15mm S=30mm)

DRAWING CONTENTS

PARTS AND ASSEMBLIES

PROJECT No 09-33-00

JDW DRAUGHTING SERVICES

J.A.M. DE WAAL. 12 BRIGHTWELL STREET PAPAKURA 2110. NEW ZEALAND. PHONE: 0064 09 2988815. MOB: 0211791000 E-MAIL: dewaal@xtra.co.nz.

PROJECTION JDWDS

DATE APRIL 2021

MODEL SCALE: 1:1

DWG SCALE: 1:1 @A3 OR AS SHOWN

Copyright © J.A.M. DE WAAL PAPAKURA NZ

SHEET: 03 OF 03 A3 No: 09A-33-00-SHT03

DRAWINGS ARE FOR PERSONAL USE ONLY NOT FOR COMMERCIAL PURPOSES